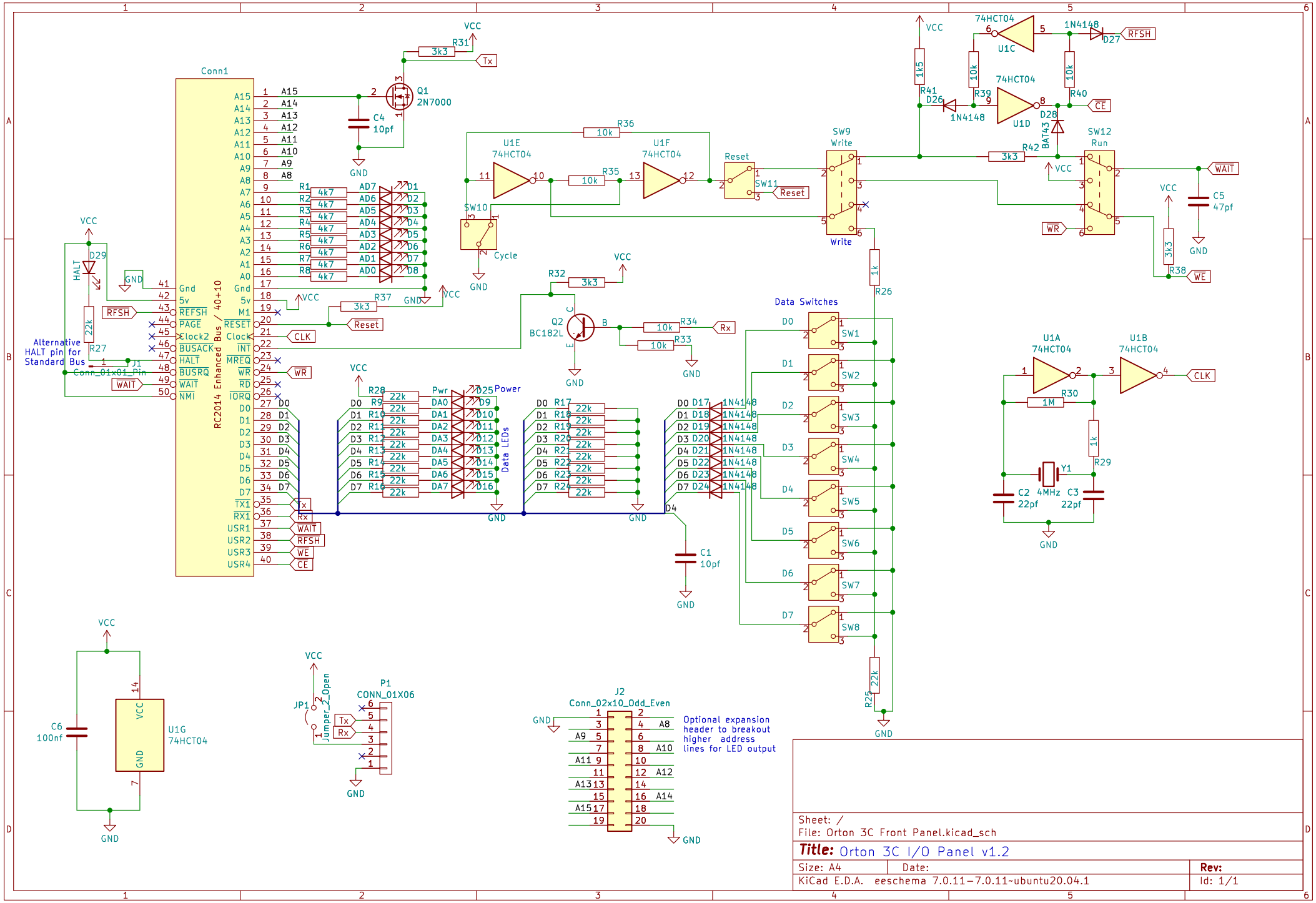
Conn1
RC2014 Enhanced Bus / 40+10
Alternative HALT pin for Standard Bus
Conn_01x01_Pin
Data Switches
Data LEDs
Power
Optional expansion header to breakout higher address lines for LED output
Conn_02x10_Odd_Even
CONN_01X06
Jumper_2_Open
74HCT04
2N7000
BC182L
BAT43
1N4148
4MHz
Sheet: /
File: Orton 3C Front Panel.kicad_sch
Title: Orton 3C I/O Panel v1.2
Size: A4
Date:
Rev:
KiCad E.D.A. eeschema 7.0.11-7.0.11~ubuntu20.04.1
Id: 1/1