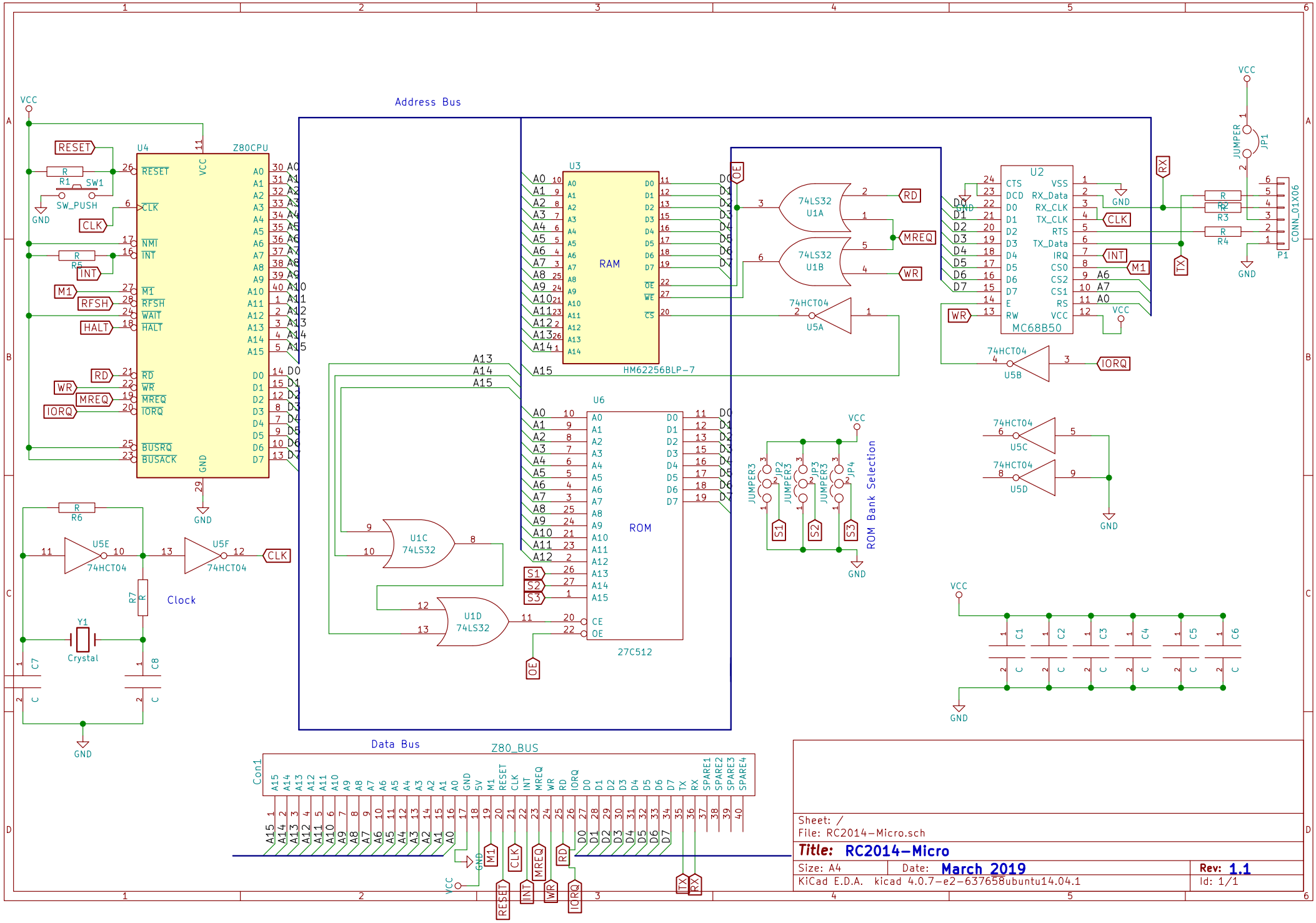

Sheet: /
File: RC2014-Micro.sch

Title: RC2014-Micro

Size: A4 | Date: March 2019 | Rev: 1.1

KiCad E.D.A. kicad 4.0.7-e2-637658ubuntu14.04.1 | Id: 1/1